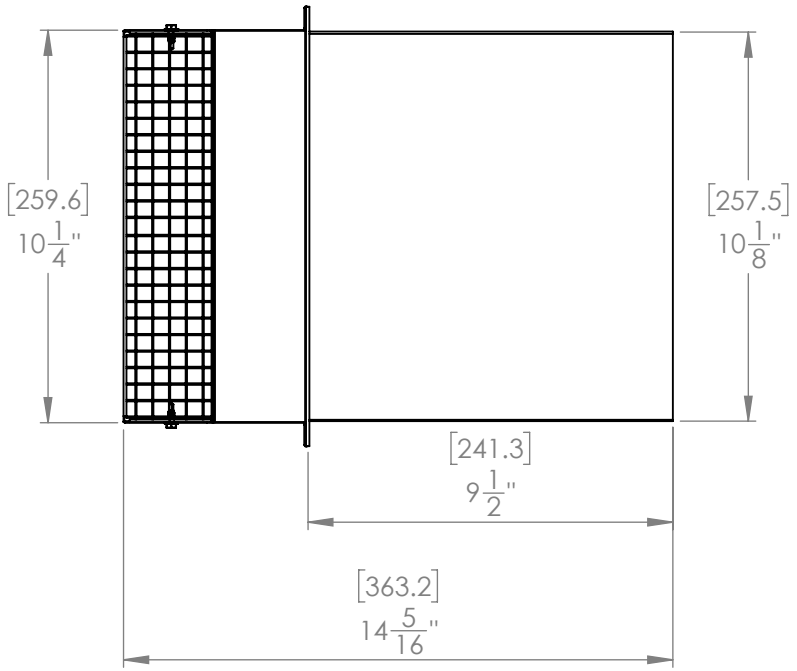

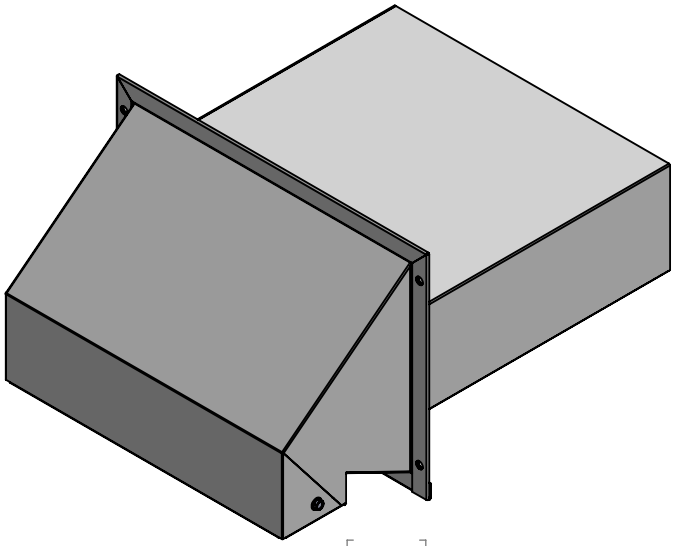

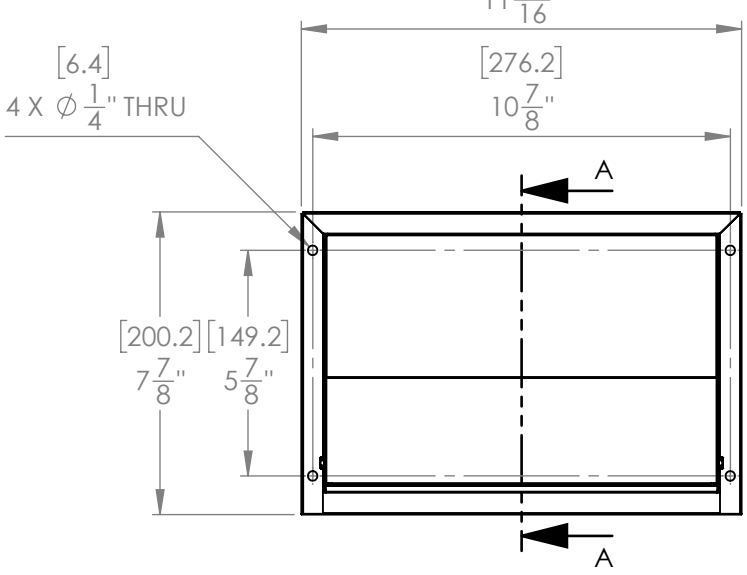

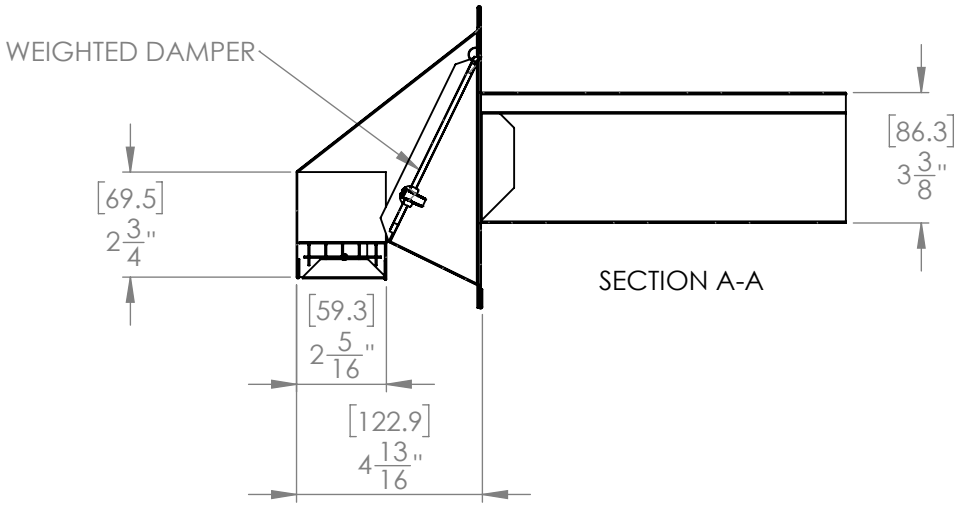

SECTION A-A

FOR REFERENCE ONLY

REVISION	DESCRIPTION :
00	TVT0013- 3 1/4" X 10" R2 Intake/Exhaust Hood

PROPRIETARY AND CONFIDENTIAL
THE INFORMATION CONTAINED IN THIS DRAWING IS THE SOLE PROPERTY OF Imperial Manufacturing Group. ANY REPRODUCTION IN PART OR AS A WHOLE WITHOUT THE WRITTEN PERMISSION OF Imperial Manufacturing Group IS PROHIBITED.

	NAME	DATE
DRAWN	ER	2018-07-12

UNLESS OTHERWISE SPECIFIED:
DIMENSIONS ARE IN MM
TOLERANCES: +/-1.588mm
+/- 1/16"

TITLE:
3 1/4" X 10" R2 Intake/Exhaust Hood

MATERIAL: Galvanized Steel

FINISH: Various

SIZE A

PART NO. (VT0515, VT0609, VT0731)

SCALE: 1:5 | DO NOT SCALE DRAWING | SHEET 1 OF 1

Imperial Manufacturing Group

5 4 3 2 1